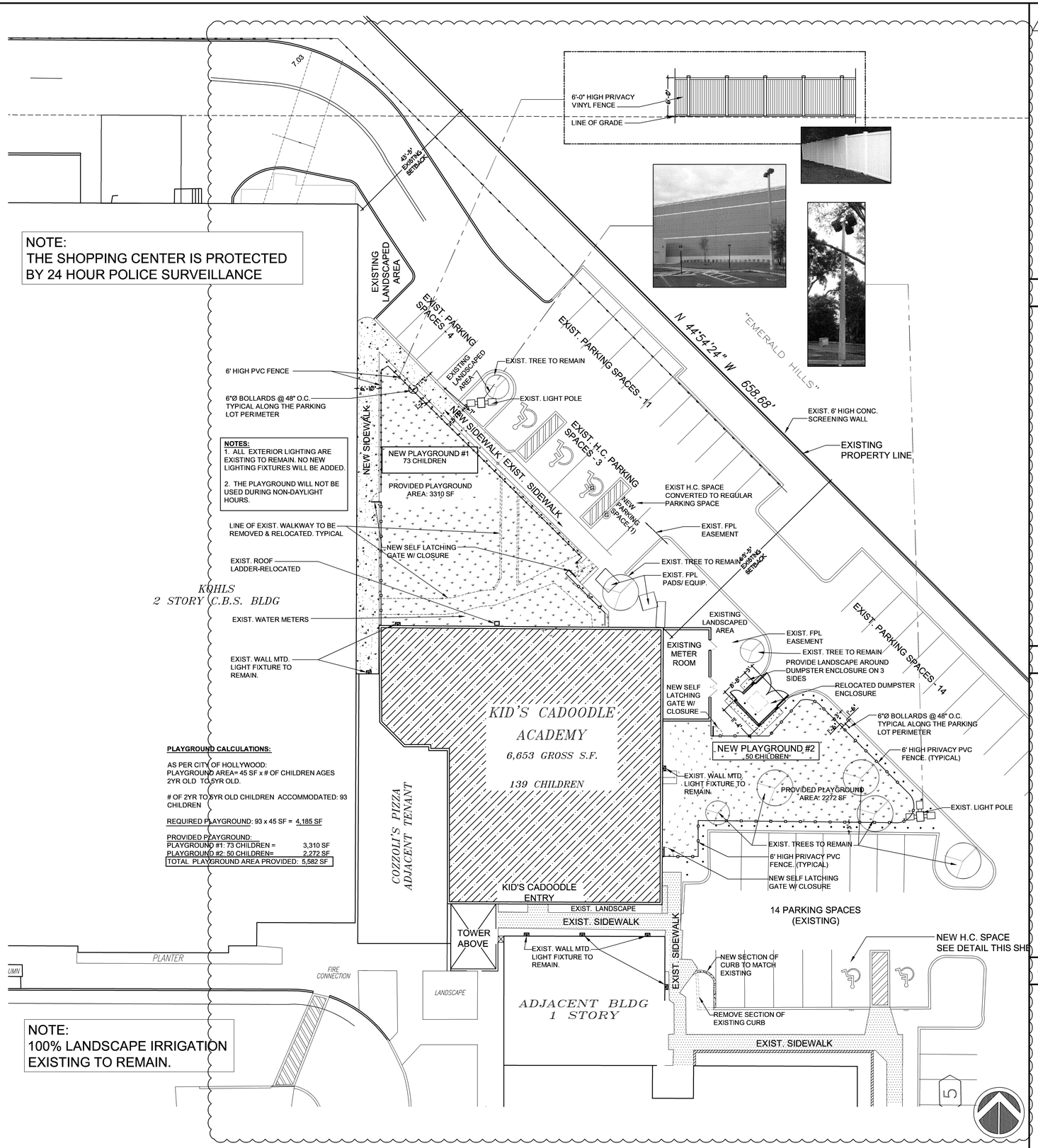

1 ENLARGED SITE PLAN

SCALE: 1/16" =1'-0"

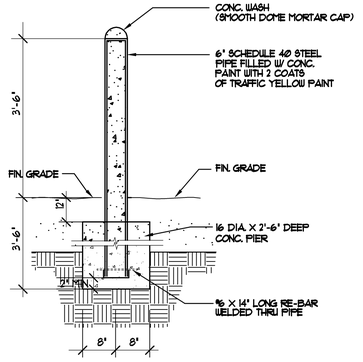

2 BOLLARD DETAIL N.T.S.

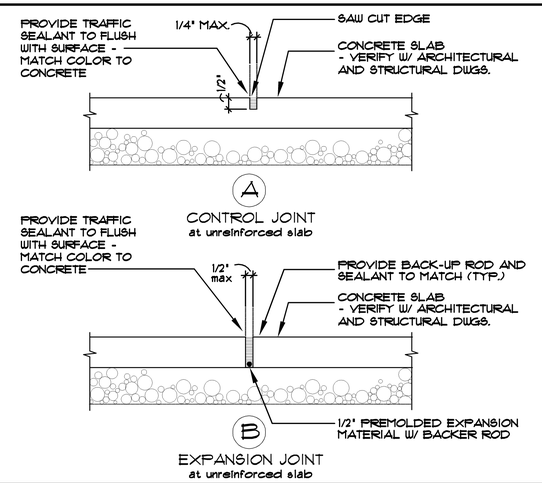

3 TYPICAL CONC. SLAB JOINTS N.T.S.

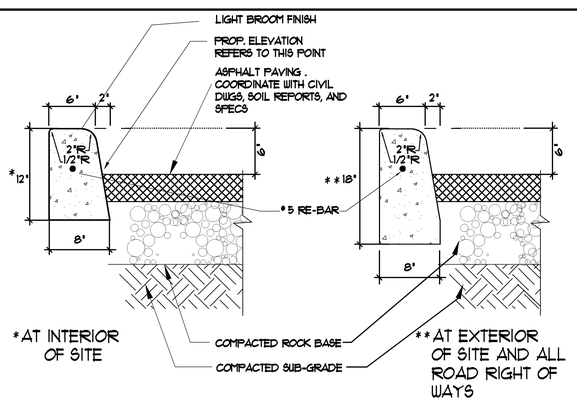

4 TYPICAL TYPE "D" CONC. CURB N.T.S.

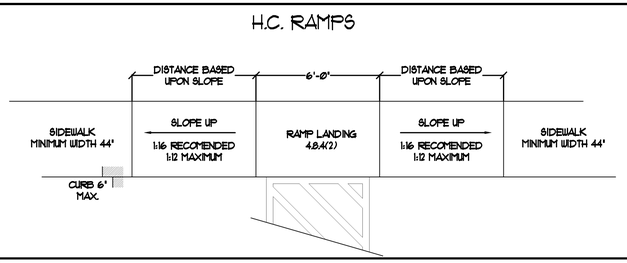

5 TYPICAL H.C. RAMP SLOPE

Kaller
JOSEPH B. KALLER + ASSOCIATES PA
AA# 26001212
2417 Hollywood Blvd. Hollywood, Florida
(954)920 5746 phone - (954) 926 2841 fax
kaller@bellsouth.net

SEAL

JOSEPH B. KALLER
FLORIDA R.A. # 0009239

PROJECT TITLE
KID'S CADOODLE ACADEMY
TENANT INTERIOR RENOVATION
4947 SHERIDAN STREET, SUITE 37B
HOLLYWOOD, FORIDA 33021

SHEET TITLE
ENLARGED SITE PLAN
SITE DETAILS

REVISIONS

No.	DATE	DESCRIPTION
1	1-13-10	DRB REV COMMENTS

This drawing, as an instrument of service, is and shall remain the property of the Architect and shall not be reproduced, published or used in any way without the permission of the Architect.

PROJECT No.: 09139
DATE: 11-26-09
DRAWN BY: DPB
CHECKED BY: JBK

SHEET

SP-2

JOSEPH B. KALLER & ASSOCIATES, P.A., ALL RIGHTS RESERVED © 2004